HSF

NOTES:
Current Rating:8A
Voltage Rating:300V
Contact Resistance:8milliohm Max
Withstand Voltage:AC2000V
Insulation Resistance:1000Megohm Min
Operation Temperature:-40℃ to +105℃

Housing Material:PA66+30%GF(UL94V-0) A3
Contact Material:Brass

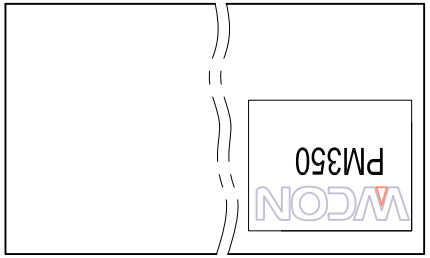

Recommended P.C.B Layout (Top Side)
(PCB BOARD TOLERANCE±0.05)

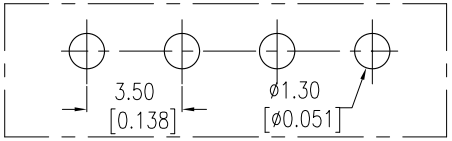

Ordering Information:

P M 350 - 1 R XX A SM 1

- M: M=Male
- 350: Picth 350=3.50
- XX: No.of Pins 02-20P
- A: Color A=Green
- SM: Contact Plated SM=Matte Tin
- 1: Series No.

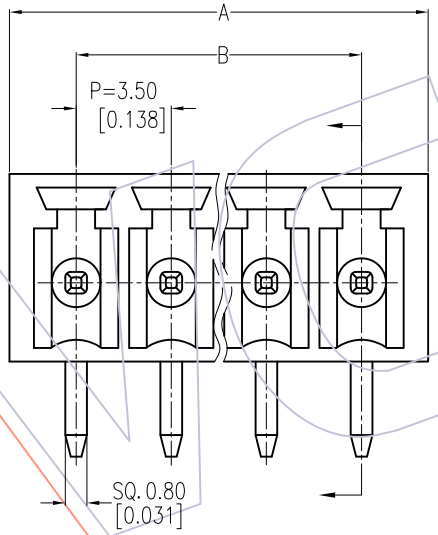

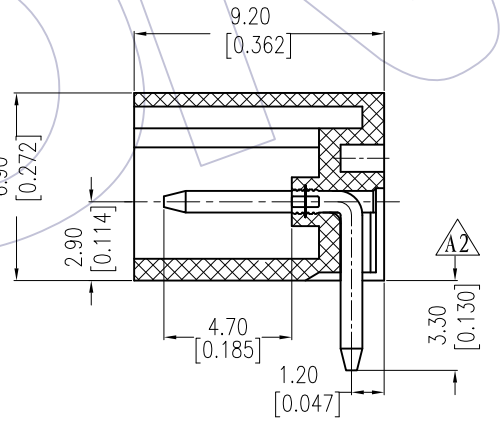

11P	39.90 ±0.30	35.00 ±0.30			
10P	36.40 ±0.30	31.50 ±0.30	20P	71.40 ±0.40	66.50 ±0.40
9P	32.90 ±0.30	28.00 ±0.30	19P	67.90 ±0.40	63.00 ±0.40
8P	29.40 ±0.20	24.50 ±0.20	18P	64.40 ±0.40	59.50 ±0.40
7P	25.90 ±0.20	21.00 ±0.20	17P	60.90 ±0.40	56.00 ±0.40
6P	22.40 ±0.20	17.50 ±0.20	16P	57.40 ±0.40	52.50 ±0.40
5P	18.90 ±0.20	14.00 ±0.20	15P	53.90 ±0.40	49.00 ±0.40
4P	15.40 ±0.20	10.50 ±0.20	14P	50.40 ±0.30	45.50 ±0.30
3P	11.90 ±0.20	7.00 ±0.20	13P	46.90 ±0.30	42.00 ±0.30
2P	8.40 ±0.20	3.50 ±0.10	12P	43.40 ±0.30	38.50 ±0.30
PIN	A	B	PIN	A	B

ITEM	Pitch	Mating
Standard	3.50	PF350
Alternate		

REV	DATE	MODIFICATION DESCRIPTION	CHANGE
A3	2013/06/05	Modify The Housing Material	A3
A2	2013/04/24	Modify The Dimension 3.50 To 3.30	A2
A1	2012/05/09	MODIFY PF350-01-XX-A-SM → PM350-1RXXASM1	A1
A0	2011/06/07	NEW	——

OPERATION	
X.X	±0.40
X.XX	±0.25
X.XXX	±0.15
Angle	± 3°
DIM	TOL

DRAW	Tsingsn	DATE	2013/06/05
CHECK		DATE	
APPROVE		DATE	

SCALE	FIT
UNIT	mm / inch
SIZE	A4
SHEET	1/1
PROJ.	

PART NO. PM350-1RXXASM1 A1

TITLE: 3.50mm Pitch Male Pluggable Terminal Blocks

Customer NO.

WCON
Http: www.wcon.com

WCON-Dongguan
Tel: +86 769 85358920
Fax: +86 769 85358915
E-mail: sales@wcon.com

WCON-Kunshan
Tel: +86 512 57468408
Fax: +86 512 57468468
E-mail: salesks@wcon.com